PARTS LIST

ALTRONIC SYSTEMS
IGNITION ACCESSORIES

FORM IAPL 4-08

CONTENTS

IGNITION COILS:

291001	Unshielded Coil
501061	Unshielded Coil
591010	Unshielded Coil
591040	Unshielded Coil
291001-S	Shielded Coil
501061-S	Shielded Coil
591010-S	Shielded Coil
591012	Flange Coil
591018	Flange Coil
591007	Integral Coil
591008	Integral Coil
591011A	Integral Coil
591011B	Integral Coil
591011C	Integral Coil

SHIELDED COIL KITS/CABLES:

510480	Secondary Accessories Package
510480-S	Secondary Accessories Package
510553	Primary Accessories Package
510714	Primary Accessories Package
593020	Spark Plug Cable Assembly, 1"
593030	Spark Plug Cable Assembly, 2"

COUPLINGS:

510551	Hub, ¾" shaft
510658	Hub, ⅝" shaft
560001	See 570001
560002	See 570001
560003	See 570003
560008	See 570007
560009	Gear-flex Coupling
570001	Flexible Coupling Assembly
570003	Flexible Coupling Assembly
570007	Gear-flex Coupling Assembly

291001 UNSHIELDED COIL

COLOR	RESISTANCE PRIMARY	RESISTANCE SECONDARY
BLACK	1.9 – 2.7Ω	7,200–10,200Ω

ITEM	DESCRIPTION	PART NO.	QTY.
1	BRACKET	502101–2	1
2	SCREW	902544	1
3	LABEL	502109	1
4	BOOT	502122	1

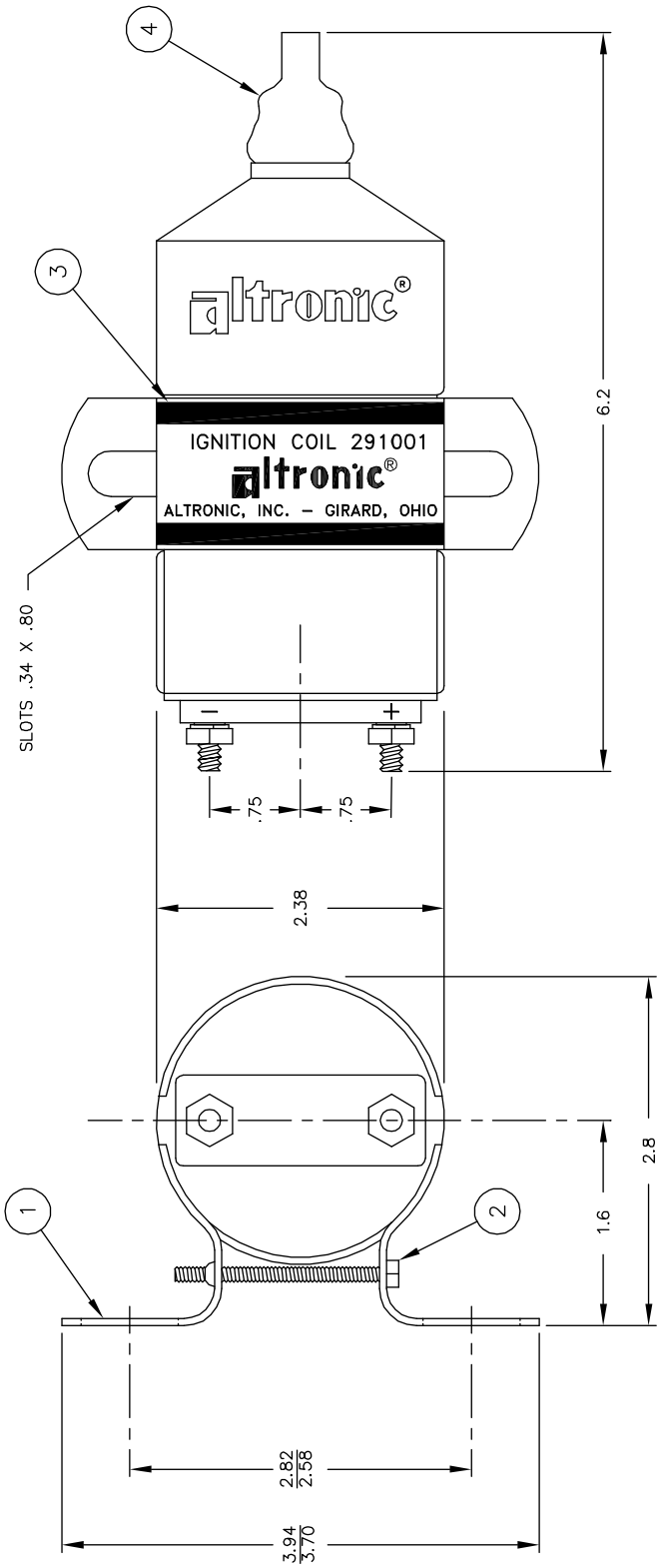

COIL CIRCUIT DIAGRAM

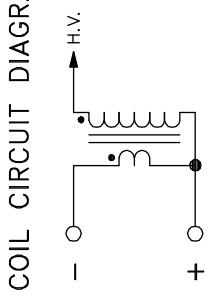

501061 UNSHIELDED COIL

COLOR	RESISTANCE PRIMARY	RESISTANCE SECONDARY
BLUE	0.2–0.5Ω	5,500–7,100Ω

ITEM	DESCRIPTION	PART NO.	QTY.
1	BRACKET	502101-2	1
2	SCREW	902544	1
3	LABEL	502099	1
4	BOOT	502122	1

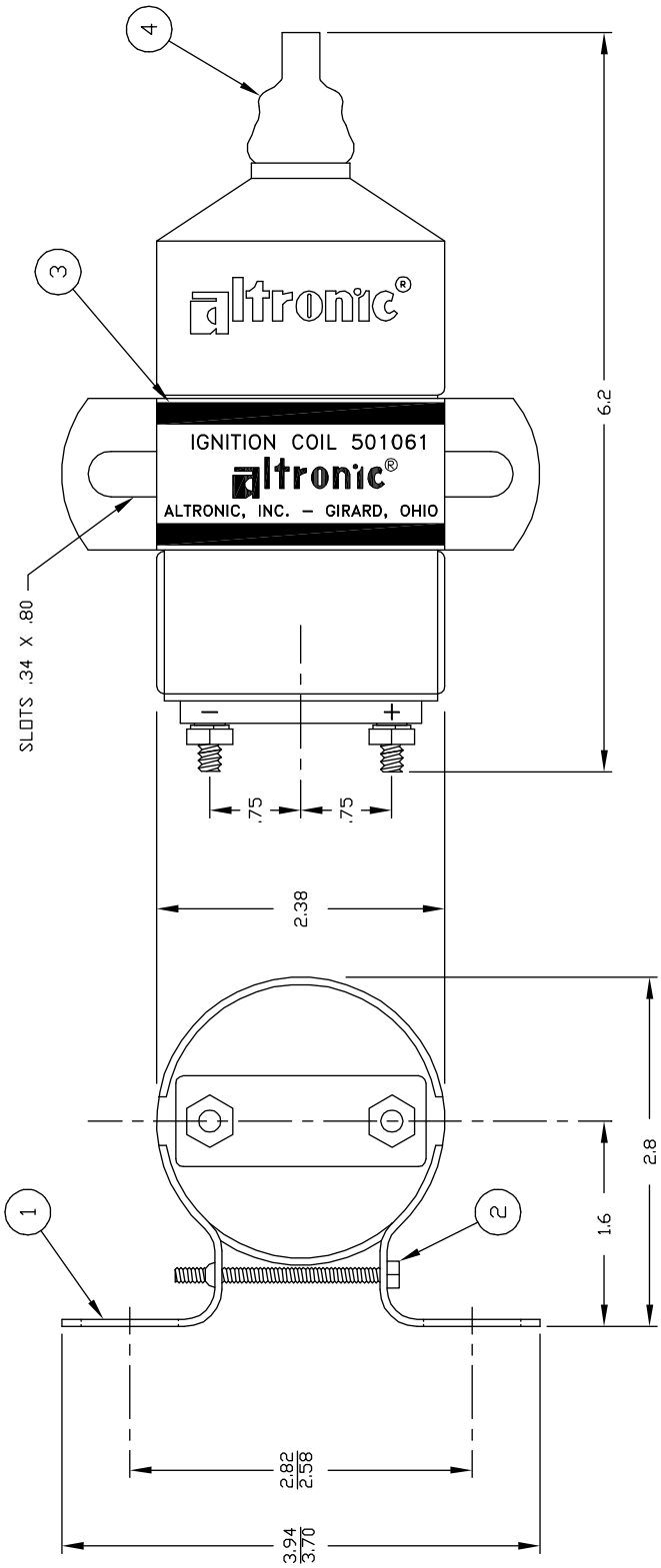

COIL CIRCUIT DIAGRAM

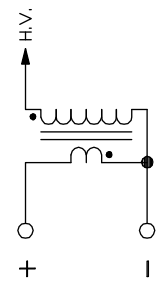

591010 UNSHIELDED COIL

COLOR	RESISTANCE PRIMARY	RESISTANCE SECONDARY
RED	0.3–0.5Ω	7,200–10,200Ω

ITEM	DESCRIPTION	PART NO.	QTY.
1	BRACKET	502101-2	1
2	SCREW	902544	1
3	LABEL	502131	1
4	BOOT	502122	1

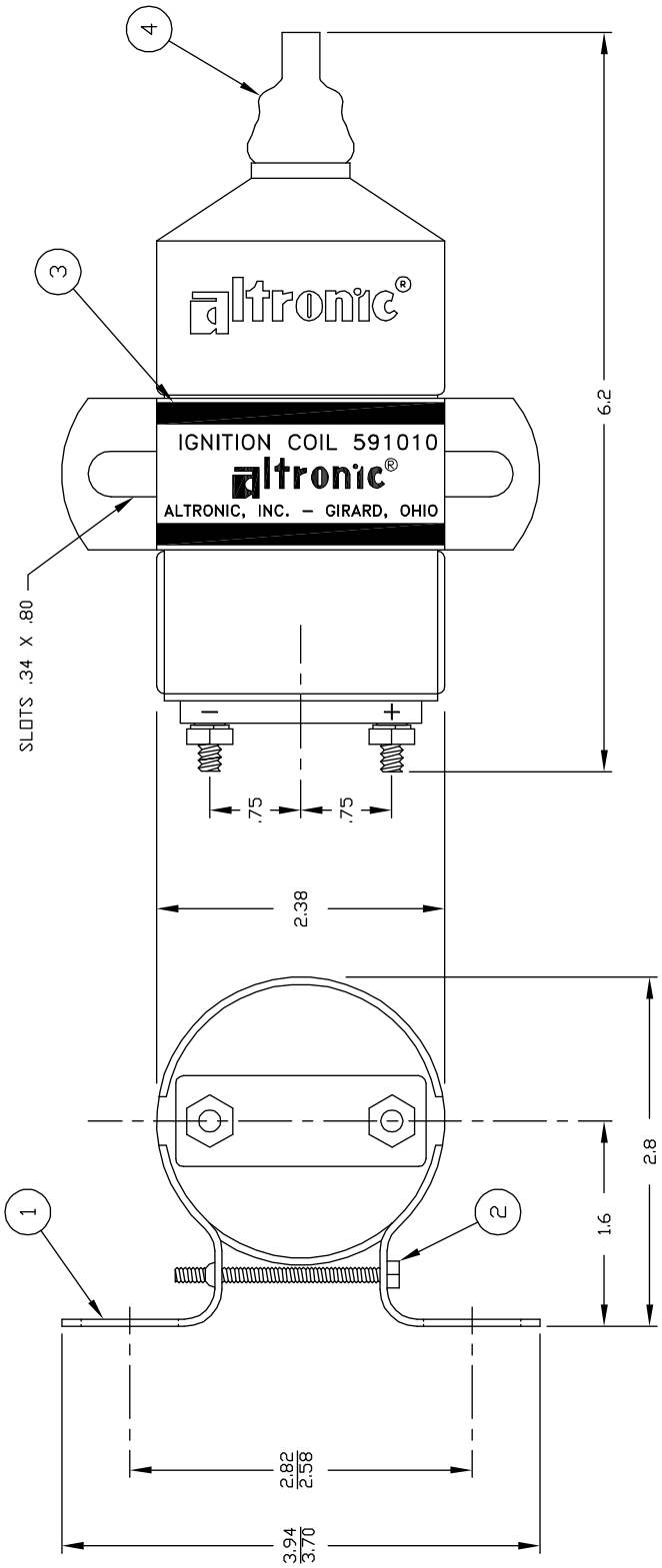

COIL CIRCUIT DIAGRAM

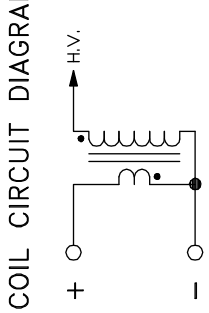

591040 UNSHIELDED COIL

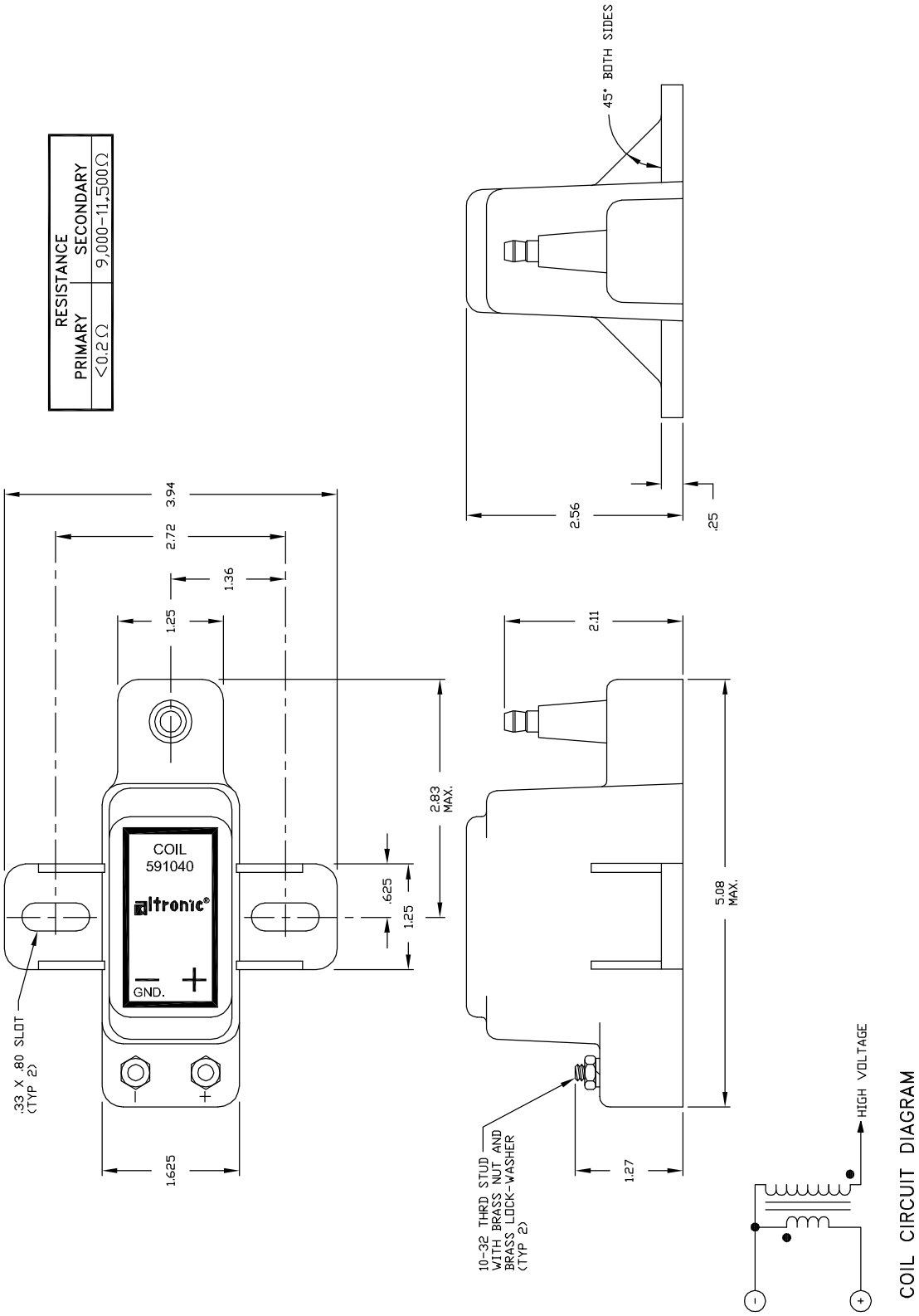

291001-S SHIELDED COIL

COIL ASSEMBLY PART NO.	ASSEMBLY INCLUDES PRIMARY ACCESS. PKG.	SECONDARY ACCESS. PKG.
291001-S-2	510553	510480
291001-S-5	–	510480

RESISTANCE PRIMARY Pin A to Pin B	SECONDARY Output to Pin B
1.9–2.7Ω	7,200–10,200Ω

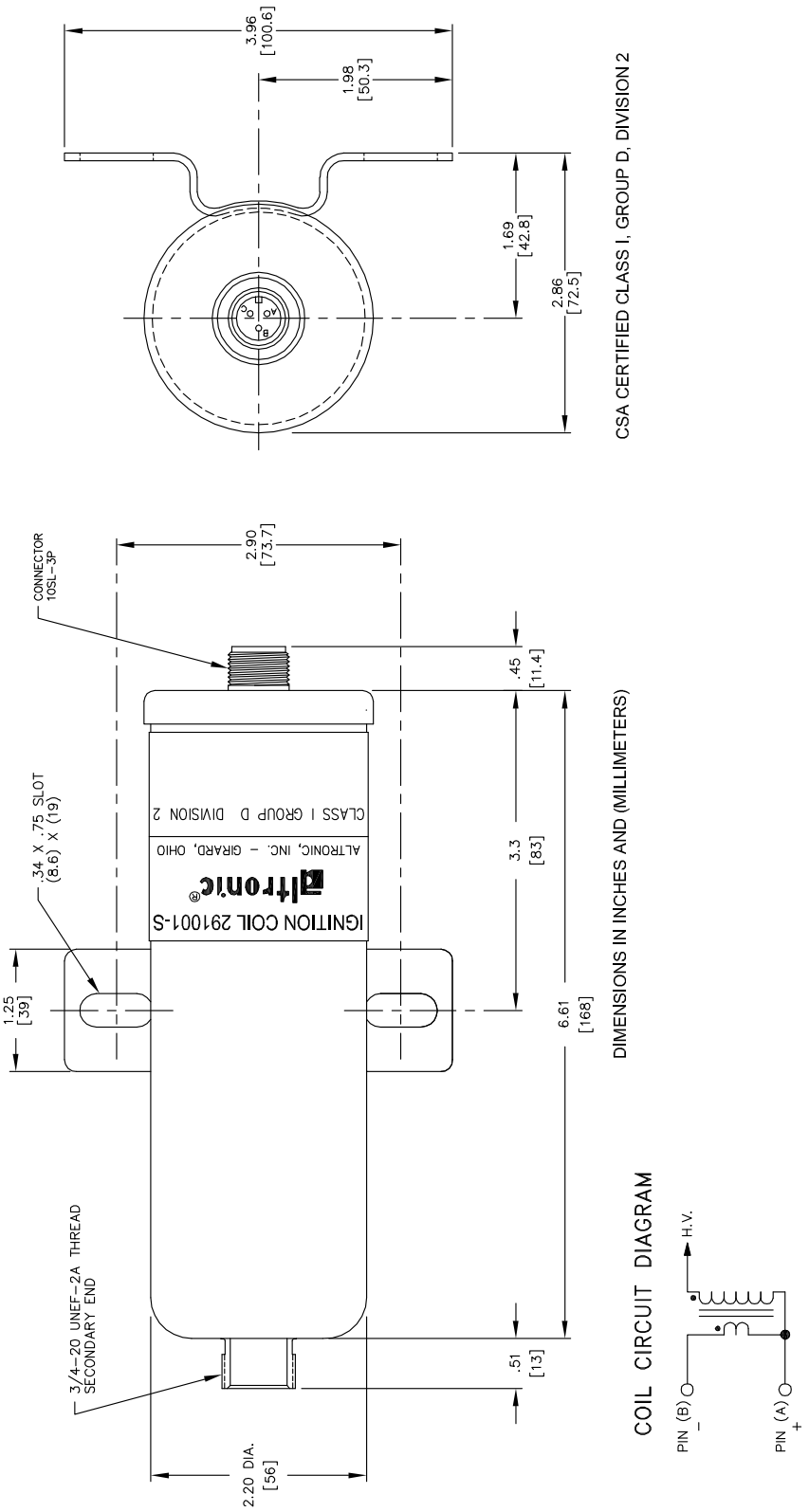

501061-S SHIELDED COIL

COIL ASSEMBLY PART NO.	ASSEMBLY INCLUDES PRIMARY ACCESS. PKG.	ASSEMBLY INCLUDES SECONDARY ACCESS. PKG.
501061-S-2	510553	510480
501061-S-5	–	510480

RESISTANCE PRIMARY Pin A to Pin B	RESISTANCE SECONDARY Output to Pin B
0.2–0.5Ω	5,500–7,100Ω

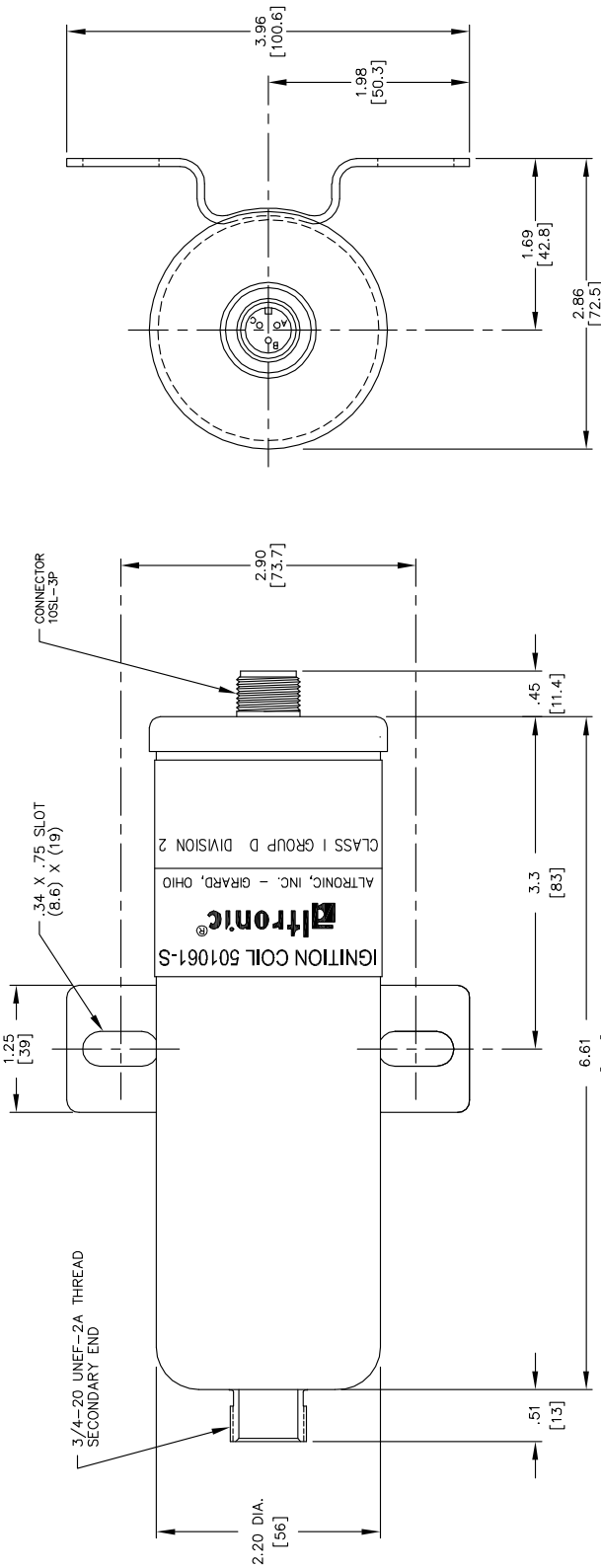

CSA CERTIFIED CLASS I, GROUP D, DIVISION 2

DIMENSIONS IN INCHES AND (MILLIMETERS)

COIL CIRCUIT DIAGRAM

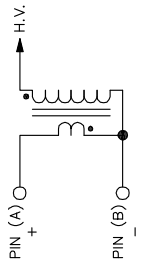

591010-S SHIELDED COIL

COIL ASSEMBLY PART NO.	ASSEMBLY INCLUDES PRIMARY ACCESS. PKG.	ASSEMBLY INCLUDES SECONDARY ACCESS. PKG.
591010-S-2	510553	510480
591010-S-5	–	510480

RESISTANCE PRIMARY Pin A to Pin B	RESISTANCE SECONDARY Output to Pin B
0.3–0.5Ω	7,200–10,200Ω

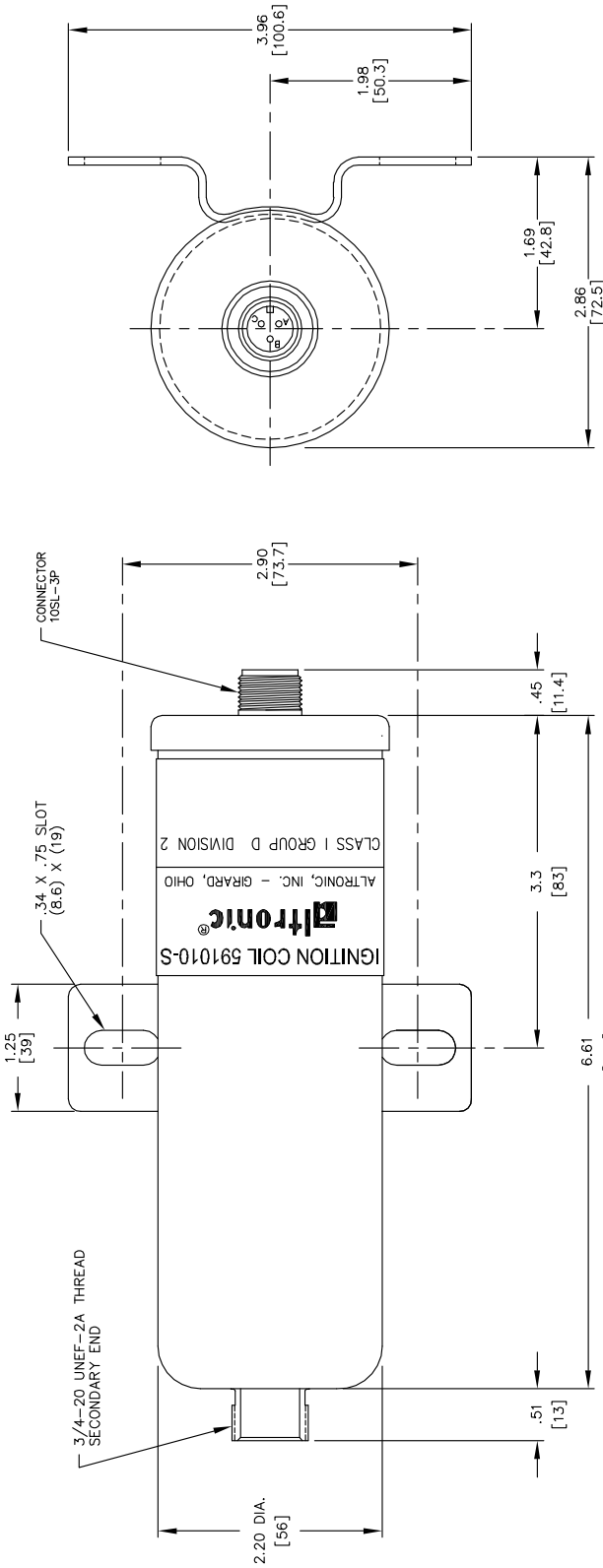

CSA CERTIFIED CLASS I, GROUP D, DIVISION 2

DIMENSIONS IN INCHES AND (MILLIMETERS)

COIL CIRCUIT DIAGRAM

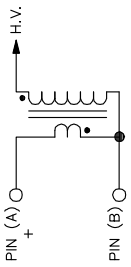

591012 FLANGE COIL

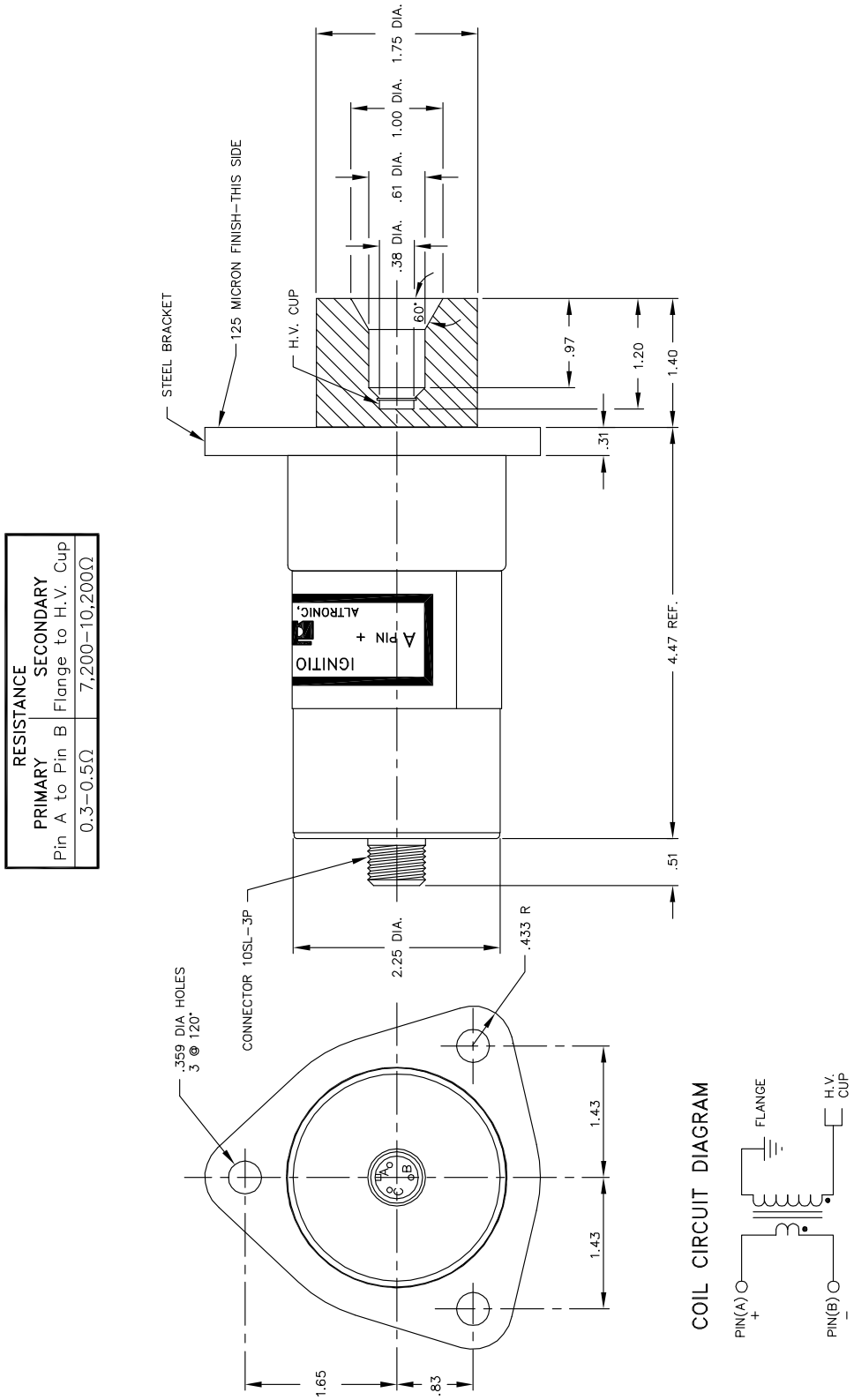

RESISTANCE	
PRIMARY	SECONDARY
Pin A to Pin B	Flange to H.V. Cup
0.3–0.5Ω	7,200–10,200Ω

591018 FLANGE COIL

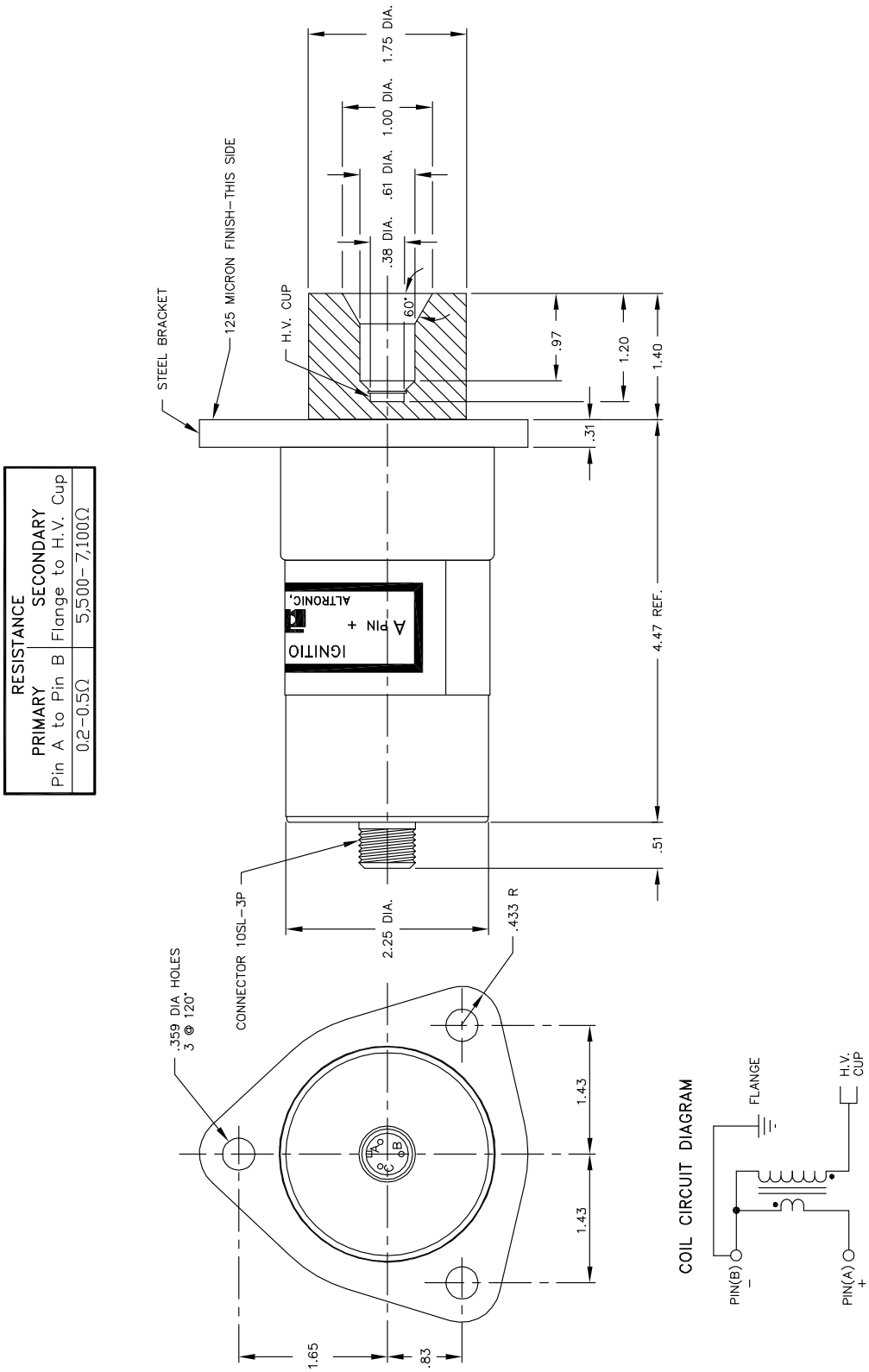

591007 INTEGRAL COIL

COIL ASSEMBLY PART NO.	INCLUDES PRIMARY ACCESS. PKG.
591007–2	510553

RESISTANCE	
PRIMARY Pin A to Pin B	SECONDARY Output to Case
0.2–0.4Ω	8,000–11,000Ω

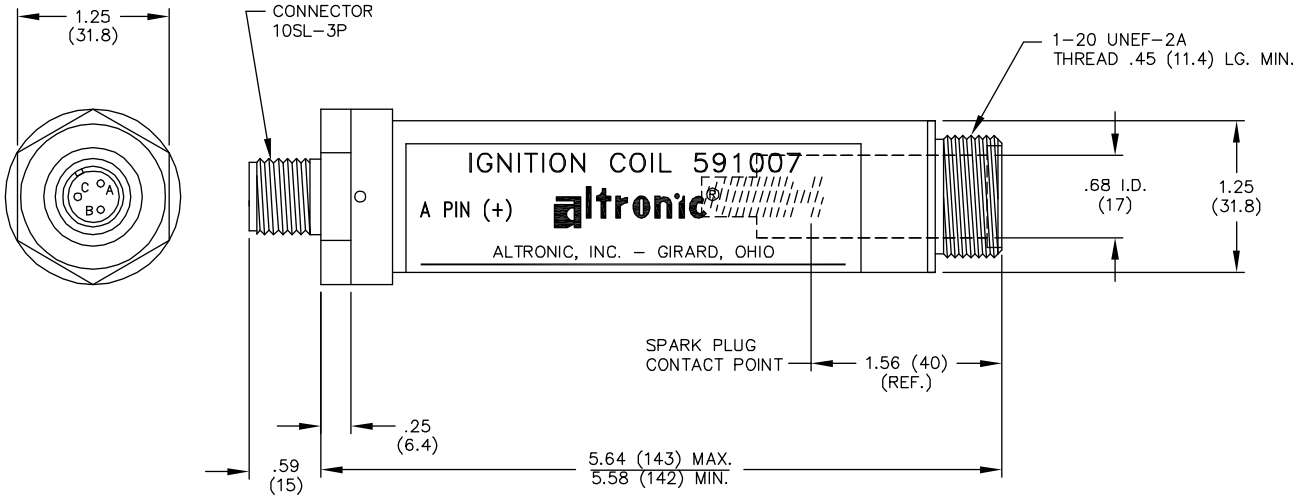

SCHEMATIC

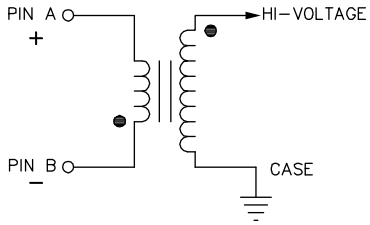

591008 INTEGRAL COIL

COIL ASSEMBLY PART NO.	INCLUDES PRIMARY ACCESS. PKG.
591008–2	510553

RESISTANCE	
PRIMARY Pin A to Pin B	SECONDARY Output to Case
2.0–3.0Ω	8,000–11,000Ω

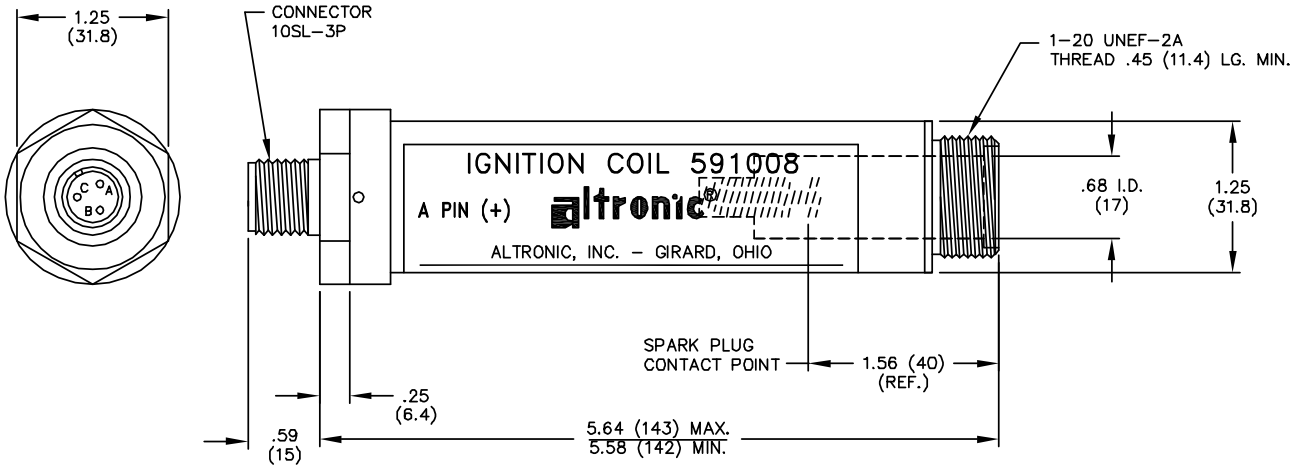

SCHEMATIC

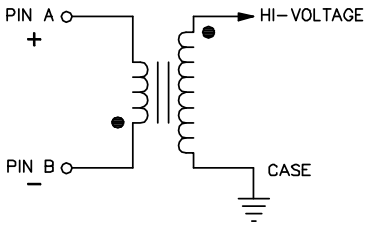

591011A INTEGRAL COIL

COIL ASSEMBLY PART NO.	INCLUDES PRIMARY ACCESS. PKG.
591011A–	510553

RESISTANCE	
PRIMARY Pin A to Pin B	SECONDARY Output to Case
0.2–0.4Ω	8,000–11,000Ω

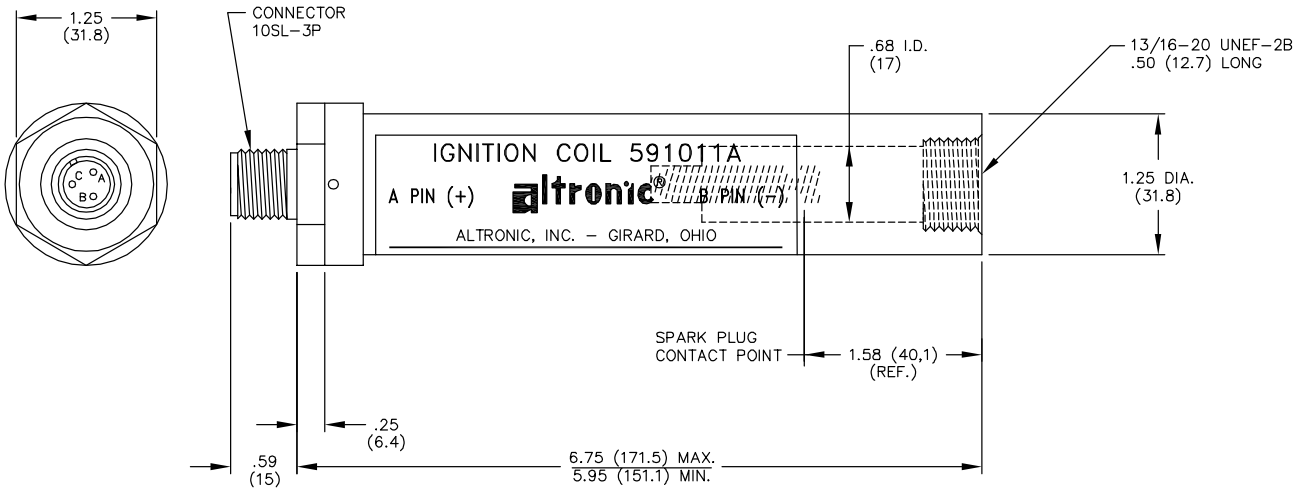

SCHEMATIC

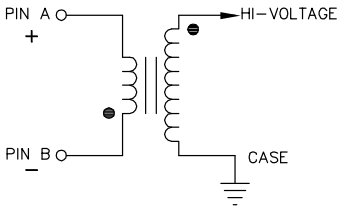

591011B INTEGRAL COIL

COIL ASSEMBLY PART NO.	INCLUDES PRIMARY ACCESS. PKG.
591011B–2	510553

RESISTANCE	
PRIMARY Pin A to Pin B	SECONDARY Output to Case
0.2–0.4Ω	8,000–11,000Ω

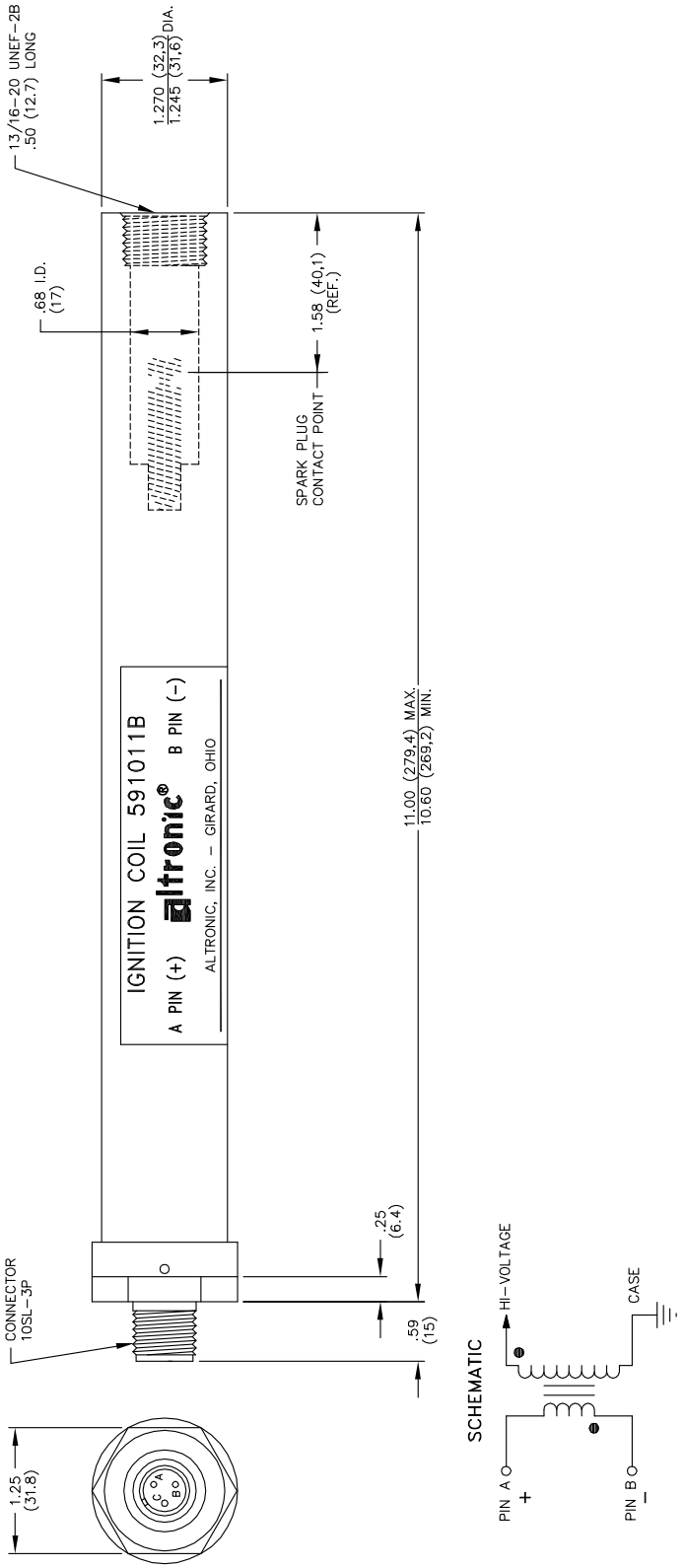

591011C INTEGRAL COIL

COIL ASSEMBLY PART NO.	INCLUDES PRIMARY ACCESS. PKG.
591011C-2	510553

RESISTANCE	
PRIMARY Pin A to Pin B	SECONDARY Output to Case
0.2–0.4Ω	8,000–11,000Ω

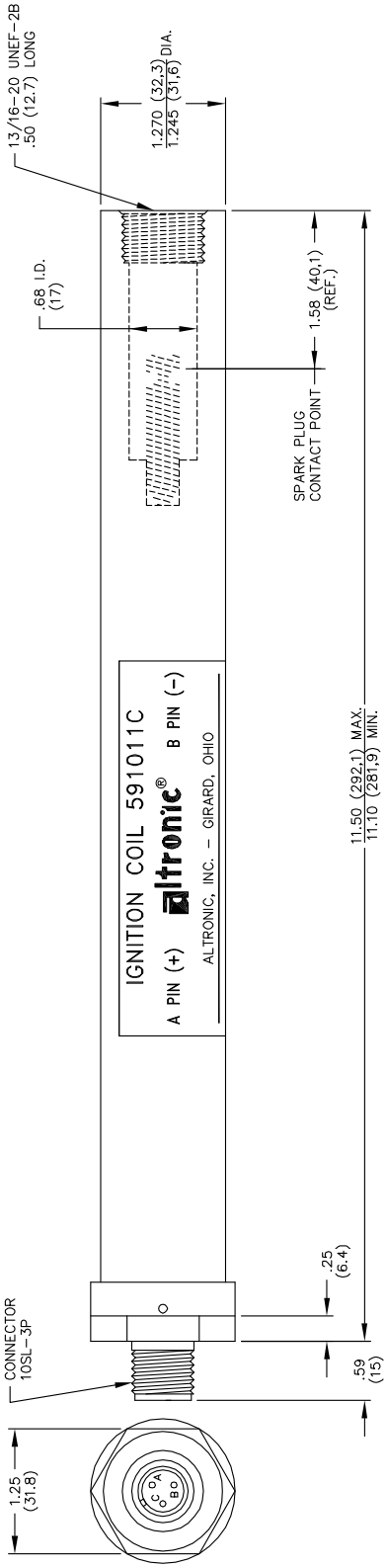

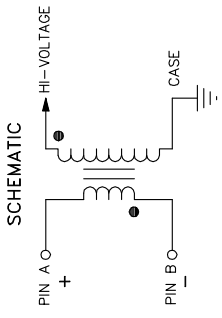

510480 SECONDARY ACCESSORIES PACKAGE

ITEM	DESCRIPTION	PART NO.	QTY.
1	NUT - 3/4-20	504088	1
2	FERRULE	504098	1
3	STUD	510473	1
4	INSULATOR	510695	1
5	WASHER	510493	1
6	SPRING UNIT	510474	1

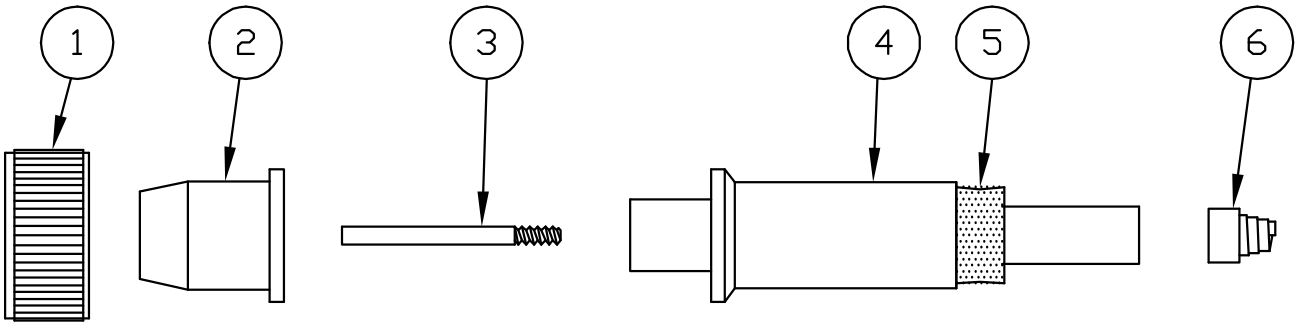

510480-S SECONDARY ACCESSORIES PACKAGE

ITEM	DESCRIPTION	PART NO.	QTY.
1	STUD	510473	1
2	INSULATOR	510472	1
3	WASHER	510493	1
4	SPRING UNIT	510474	1

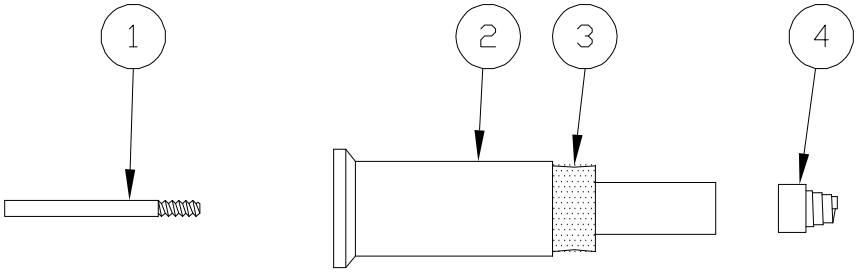

510553 PRIMARY ACCESSORIES PACKAGE

ITEM	DESCRIPTION	PART NO.	QTY.
1	CONNECTOR	504022	1
2	GROMMET	504118	1
3	FERRULE	504081	1
4	NUT	504080	1

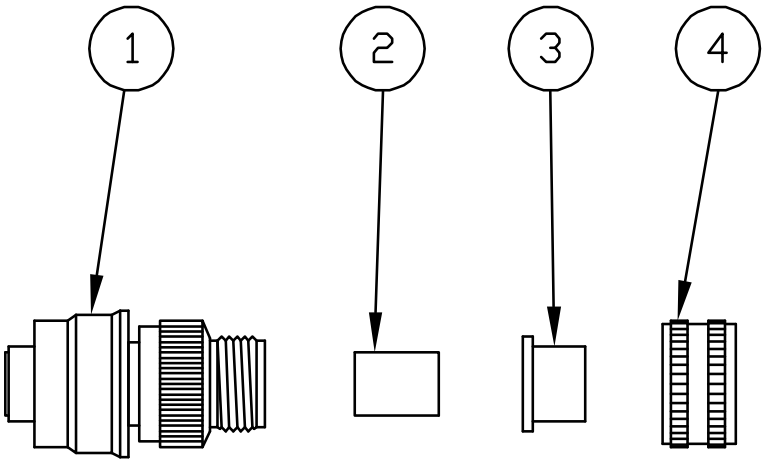

510714 PRIMARY ACCESSORIES PACKAGE

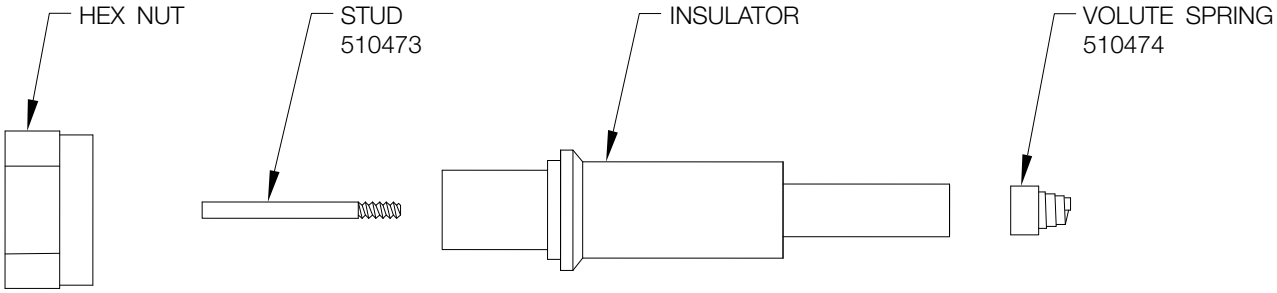

593020 SPARK PLUG CABLE ASSEMBLY, 1"

ITEM #	DESCRIPTION	PART #	GROUP # ("L" length)					
			10	13	16	18	24	30
			QUANTITY					
1	CONDUIT ASSEMBLY	580015–L	10	13	16	18	24	30
2	LABEL	502116	1	1	1	1	1	1
3	CABLE, 7mm	503186	16"	19"	22"	24"	30"	36"
4	INSULATOR	510472	1	1	1	1	1	1
5	WASHER	510493	1	1	1	1	1	1
6	SPRING	510474	1	1	1	1	1	1
7	STUD	510473	1	1	1	1	1	1
8	INSULATOR ASSEMBLY	504205	1	1	1	1	1	1
9	NAIL	510547	1	1	1	1	1	1

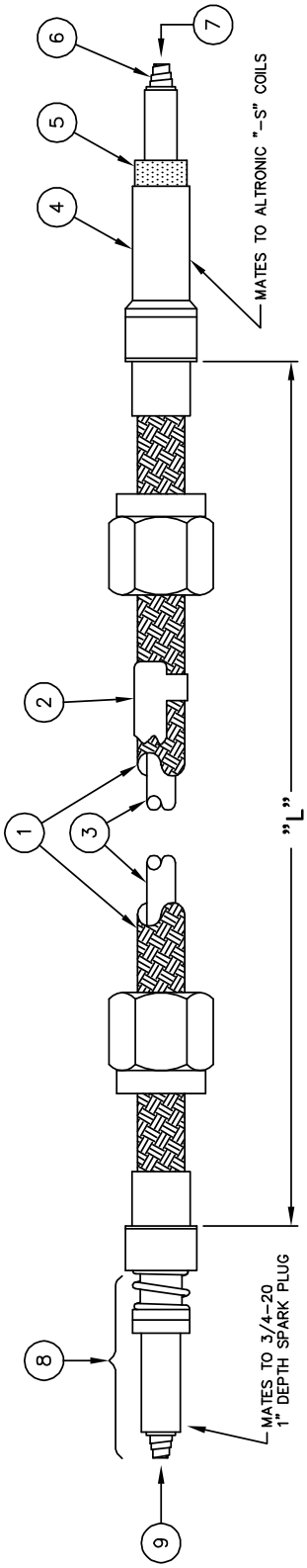

593030 SPARK PLUG CABLE ASSEMBLY, 2"

ITEM #	DESCRIPTION	PART #	GROUP # ("L" length)					
			10	13	16	18	24	30
			QUANTITY					
1	CONDUIT ASSEMBLY	580015–L	10	13	16	18	24	30
2	LABEL	502116	1	1	1	1	1	1
3	CABLE, 7mm	503186	17"	20"	23"	25"	31"	37"
4	INSULATOR	510472	1	1	1	1	1	1
5	WASHER	510493	1	1	1	1	1	1
6	SPRING	510474	1	1	1	1	1	1
7	STUD	510473	1	1	1	1	1	1
8	INSULATOR ASSEMBLY	504137	1	1	1	1	1	1
9	NAIL	510547	1	1	1	1	1	1

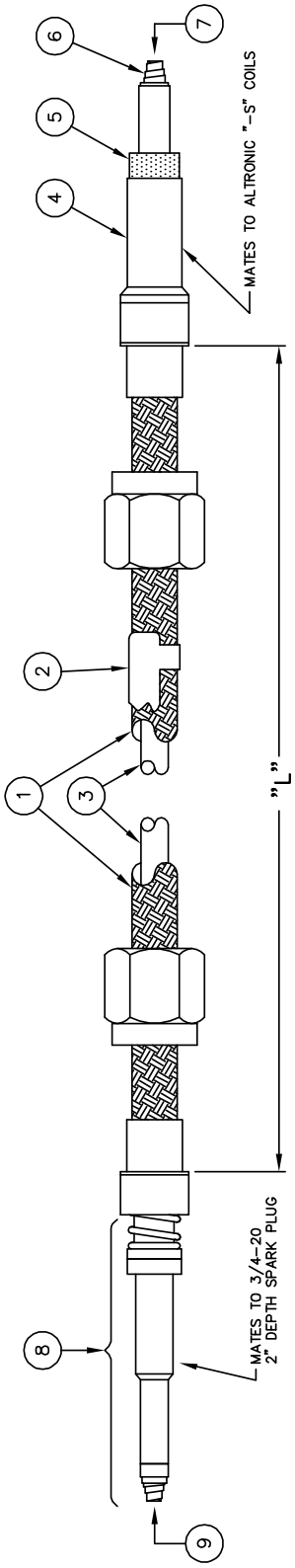

510551 HUB, ¾" SHAFT

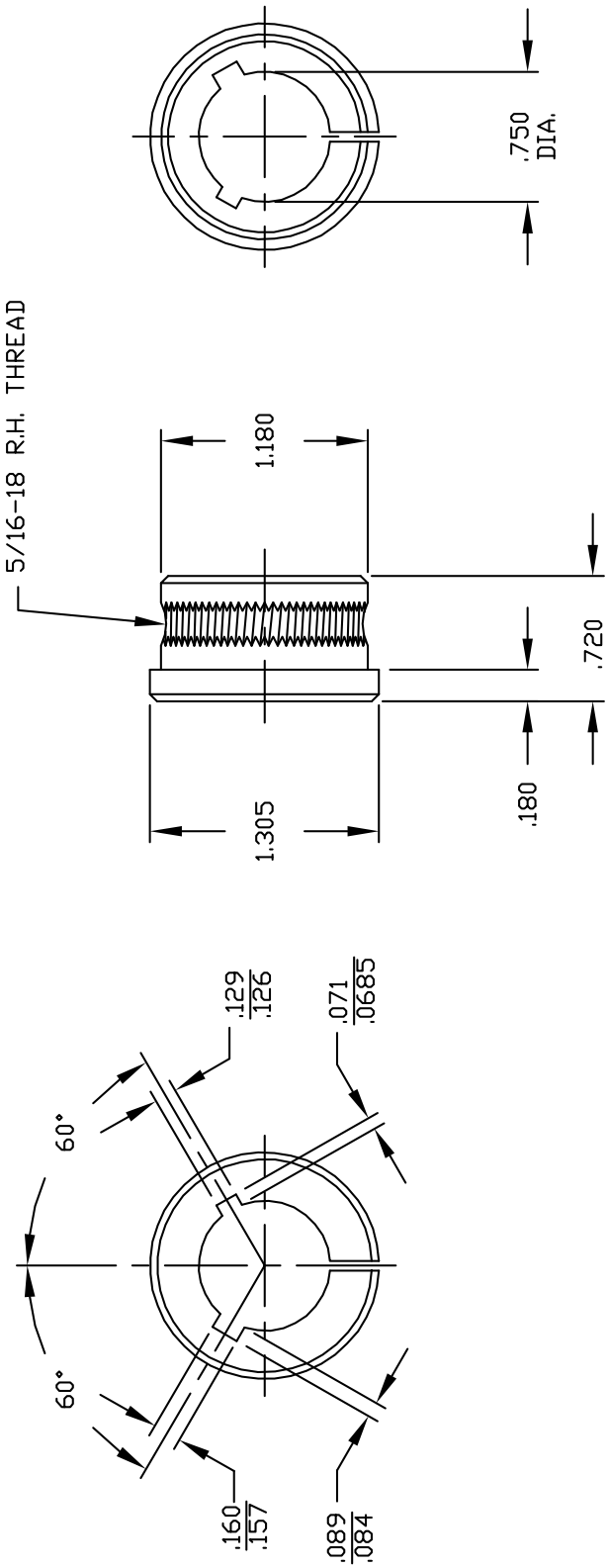

510658 HUB, ⅝" SHAFT

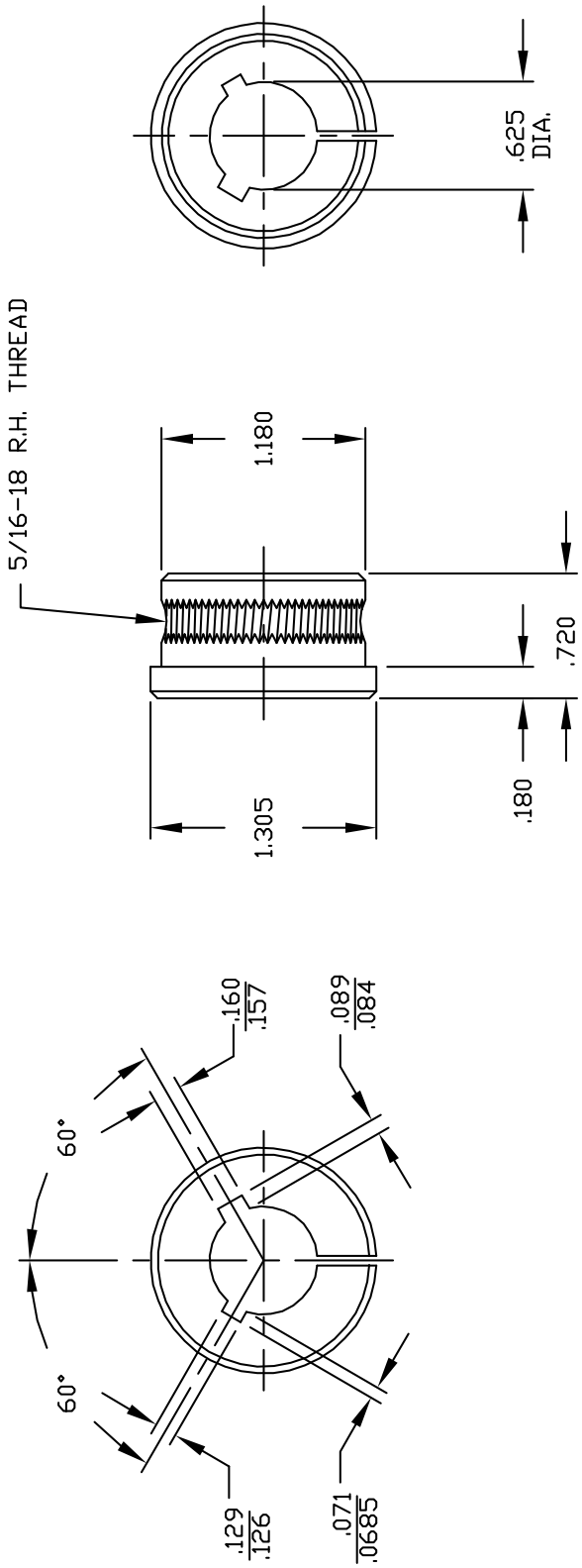

560009 GEAR-FLEX COUPLING

ITEM	DESCRIPTION	PART NO.	QTY.
1	HUB ASSEMBLY	560006	1
1a	SPRING PIN	902475	1
2	SLEEVE	510610	1
3	HUB	510601	1
4	SPRING PIN	902571	1

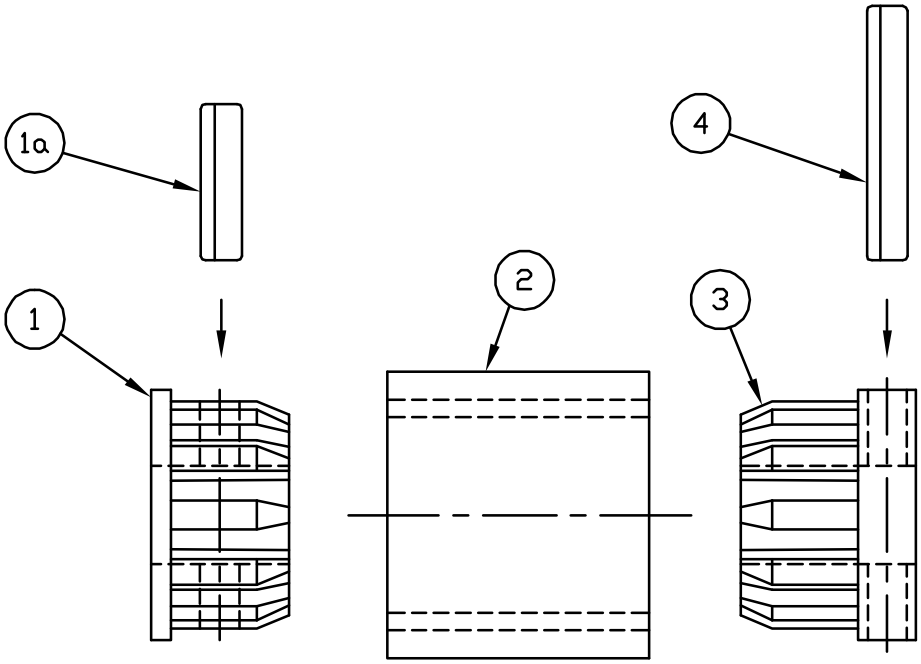

570001 FLEXIBLE COUPLING ASSEMBLY

ITEM	DESCRIPTION	PART NO.	QTY.
1	FLEX COUPLING	560002	1
1a	SPRING PIN	902475	1
2	ENGINE DRIVE MEMBER	560001	1
2a	SPRING PIN	902475	2
2b	BOLT	902481	1
2c	NUT	902482	1

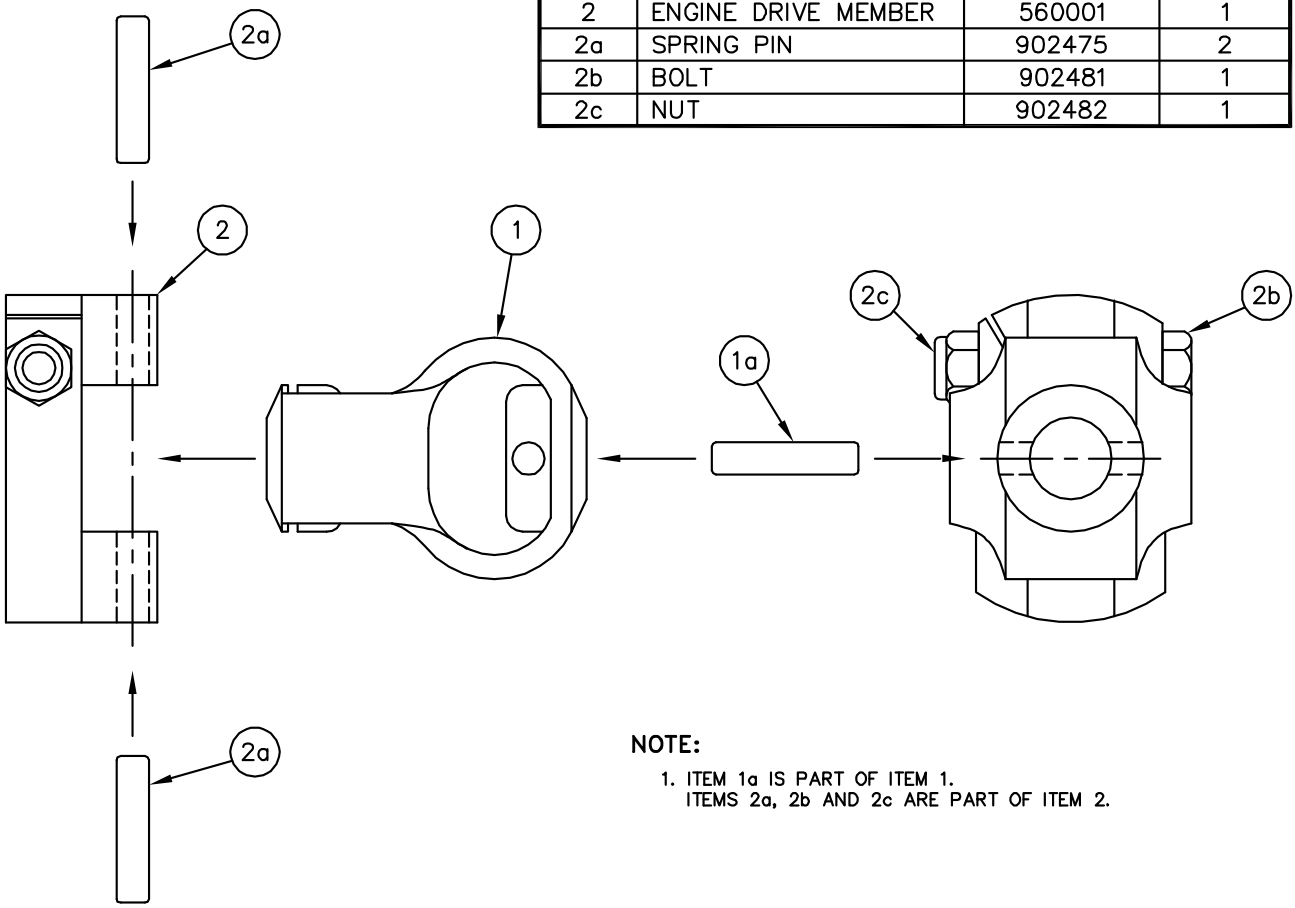

NOTE:

1. ITEM 1a IS PART OF ITEM 1.
   ITEMS 2a, 2b AND 2c ARE PART OF ITEM 2.

570003 FLEXIBLE COUPLING ASSEMBLY

ITEM	DESCRIPTION	PART NO.	QTY.
1	FLEX COUPLING	560003	1
1a	SPRING PIN	902475	1
2	ENGINE DRIVE MEMBER	560001	1
2a	SPRING PIN	902475	2
2b	BOLT	902481	1
2c	NUT	902482	1

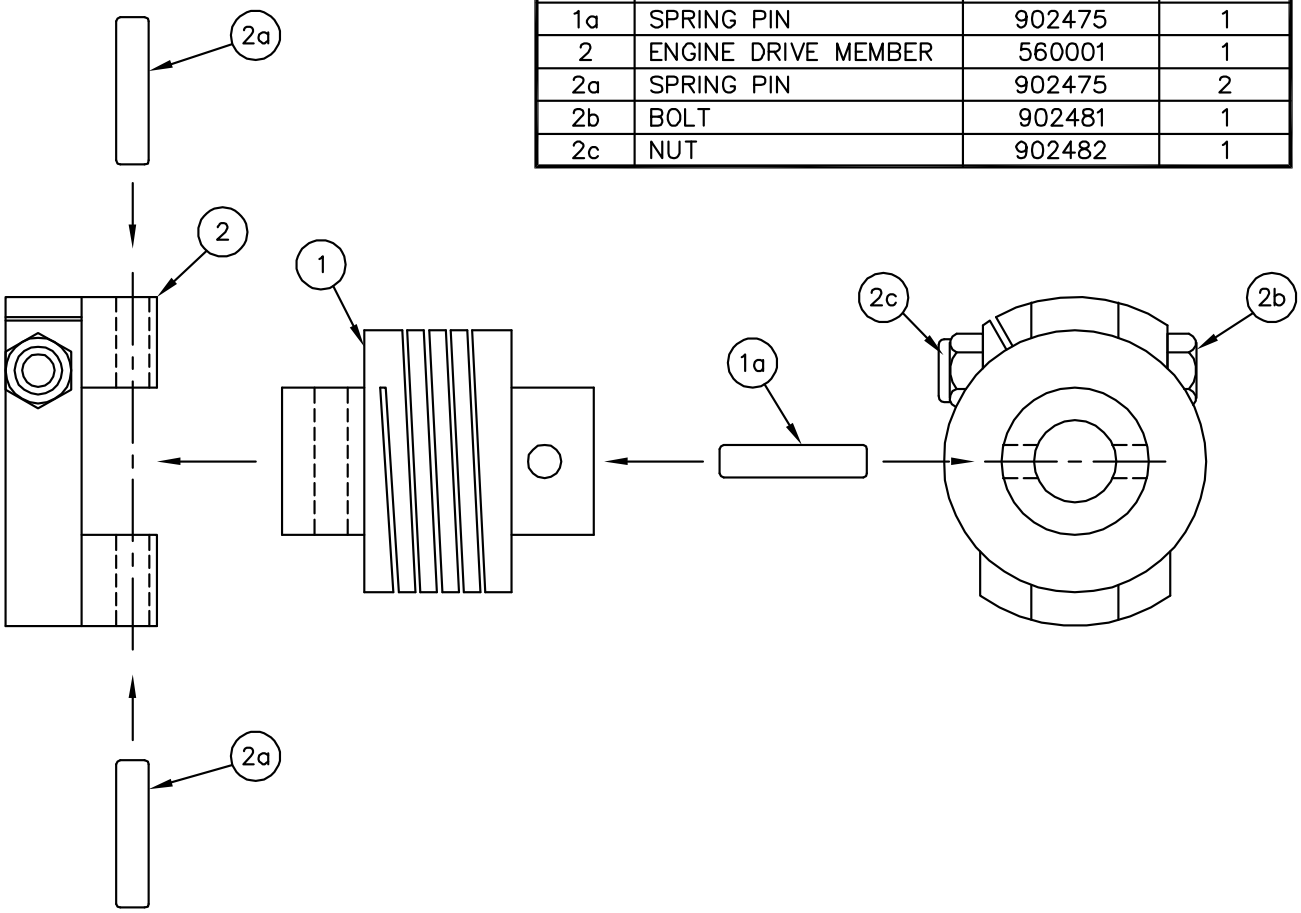

570007 GEAR-FLEX COUPLING ASSEMBLY
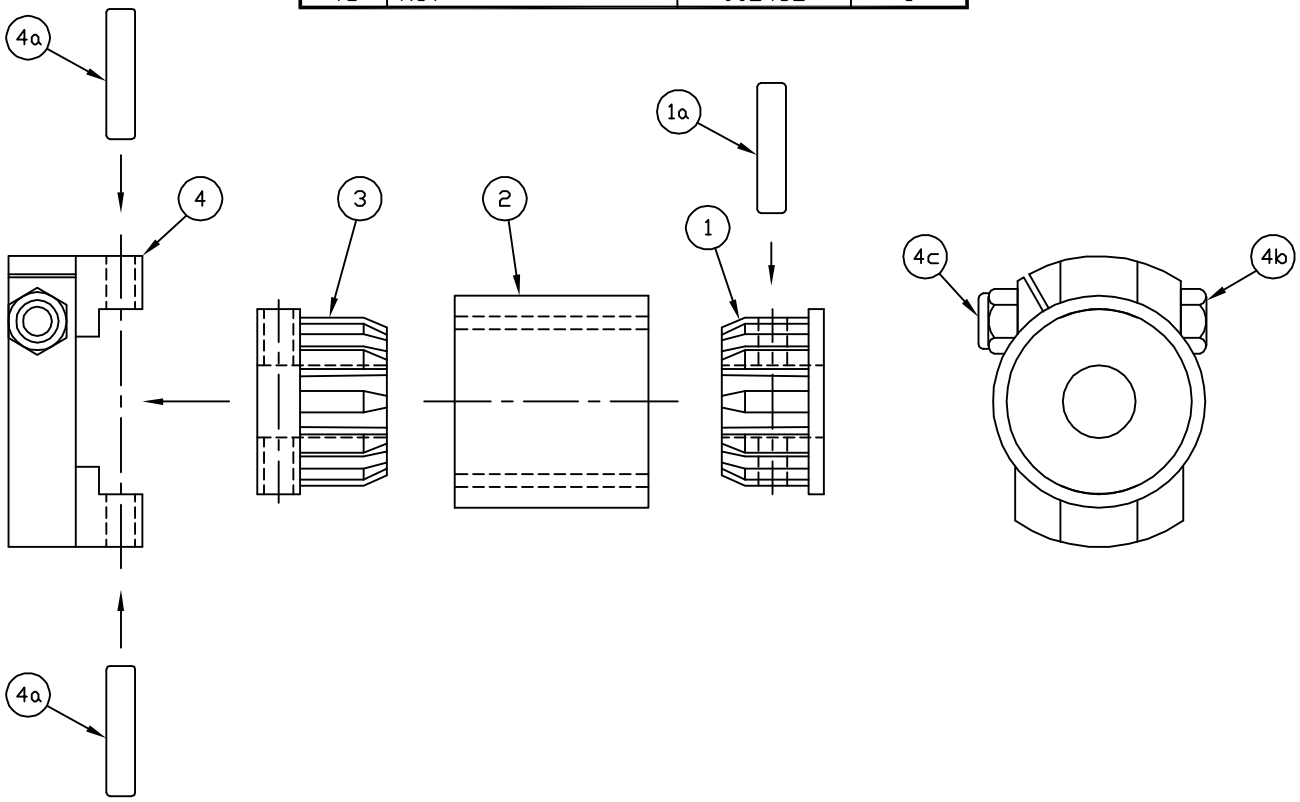
ITEM	DESCRIPTION	PART NO.	QTY.
1	HUB ASSEMBLY	560006	1
1a	SPRING PIN	902475	1
2	SLEEVE	510610	1
3	HUB	510601	1
4	ENGINE DRIVE MEMBER	560008	1
4a	SPRING PIN	902475	2
4b	BOLT	902481	1
4c	NUT	902482	1