291001 UNSHIELDED COIL

COLOR	RESISTANCE PRIMARY	RESISTANCE SECONDARY
BLACK	1.9–2.7Ω	7,200–10,200Ω

ITEM	DESCRIPTION	PART NO.	QTY.
1	BRACKET	502101–2	1
2	SCREW	902544	1
3	LABEL	502109	1
4	BOOT	502122	1

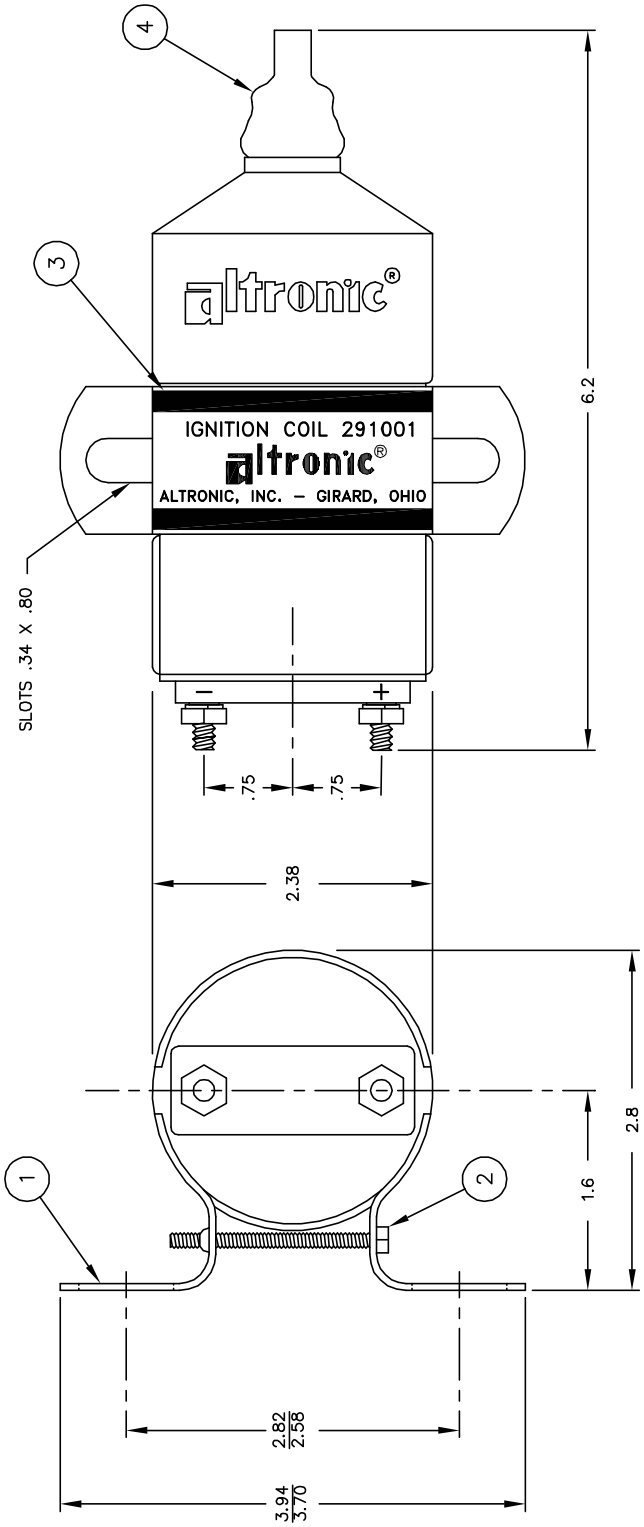
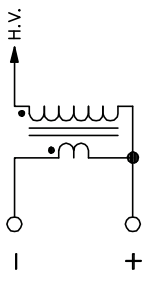
COIL CIRCUIT DIAGRAM